WASION AMERICAS

Aventa Electric Meter

One Meter. Any Network.



The Wasion Americas Aventa® Electric Meter is a flexible, feature-rich metering platform designed to empower utilities with choices that fit their strategies as they evolve. This meter sets a new benchmark for accuracy, adaptability, and reliable performance at an attractive price point. Modernize your infrastructure and take advantage of AMI 2.0 with the support of this robust, secure, advanced meter that delivers exceptional value and consumer benefits.

Applications

- Residential
- Commercial & Industrial

Key Features & Benefits

- Integrates with third-party NICs for seamless operations
- Utilizes DLMS/COSEM protocol. The meter meets all ANSI, IEC, IEEE, NEMA, FCC, UL, and Measurement Canada standards. It supports Rural Utility Services, USMCA, DoD, and DHS requirements
- Provides built-in safety, temperature, and tamper intelligence, reducing risks and identifying issues before a problem arises
- Delivers true power-supply resilience. Every meter comes with a supercapacitor that provides backup power during outages
- Includes up to four profile sets and 16 configurable channels per set, giving utilities deep visibility into usage patterns across diverse customer classes
- Leverages encrypted Bluetooth®-enabled communications for secure, local connectivity to standard field tools across a variety of platforms, simplifying field service calls

WASION AMERICAS

Aventa Electric Meter

One Meter. Any Network.

Full Feature Set

Energy

- Active Energy: Delivered, Received, Net, Uni-Directions
  - Per phase and aggregate supported for all Active energy measurements
- Reactive Energy: Delivered, Received, Net, Q1, Q2, Q3, Q4
  - Per phase and aggregate supported for all Reactive energy measurements
- Apparent Energy: Delivered, Received, Net, Q1, Q2, Q3, Q4
  - Per phase and aggregate supported for all Apparent energy measurements
  - Meters support Arithmetic and Vectorial calculations for each energy listed above
- Full Spectrum or Fundamental supported

Demand

- 6 maximum demand registers supported
- Configurable from energies listed above
- Includes cumulative, continuous cumulative, present, previous, and 2 coincident demands
- 1, 2, 3, 4, 5, 10, 12, 15, 30, and 60 minute interval length supported with whole minute sub-intervals
- Optional mechanical demand reset

Event Logs

- Fraud Detection Log
- Failure Detection Log
- Power Quality Log
- Standard Event Log
- Communication Log
- Disconnect Control Log
- Firmware Upgrade Log

Instantaneous Data

- RMS Voltage: Per phase (full spectrum or fundamental)
- RMS Current: Per phase (full spectrum or fundamental)
- Power Factor: Per phase or Total (full spectrum or fundamental)
- Current Angles
- Voltage Angles
- Active Power: Delivered, Received, Net (full spectrum or fundamental for total, per phase)
- Reactive Power: Delivered, Received, Net (full spectrum or fundamental for total, per phase)
  - Q1, Q2, Q3, Q4 – Full spectrum or fundamental.
- Apparent Power: Delivered, Received, Net – Vectorial and Arithmetic calculation methods (full spectrum or fundamental for total, per phase)
  - Q1, Q2, Q3, Q4 – Full spectrum or fundamental
  - Vectorial and arithmetic calculation are supported
- Frequency
- Temperature per blade with blade position identification
- Total Harmonic Distortion: Per phase
- Total Demand Distortion: Per phase

Time of Use

- 8 rates
- 6 season tables, 6-week tables, 8-day tables
- 48 switch points, 160 holidays supported
- DST supported
- Calendar and schedule are programmable

Display

- 10 digits
- Three display modes:
  - Normal mode, test mode, and alternate mode
  - Set on and set off time programmable
  - Display items programmable

Self Reads

- Configurable Daily Self-read
- Configurable Monthly End of Billing Read

WASION AMERICAS

Aventa Electric Meter

One Meter. Any Network.

Full Feature Set (Continued)

Profiles

- 4 profiles supported
- Up to 16 channels for each load profile
- Configurable Interval time between 1, 5, 10, 15, 30, 60 minutes
- Supports storing profiles for 90 days with 4 profiles configured with 16 channels in each, and an interval length of 15 minutes
- The following registers are configurable:
  - Energy (full Spectrum or fundamental)
  - Instantaneous, Average, Maximum and Minimum for the following are configurable:
  - Watts: Delivered, Received, Net (Total and per-phase)
  - VAR: Delivered, Received, Net, Q1, Q2, Q3, Q4 (Total and per phase)
  - VA: Delivered, Received, Net, Q1, Q2, Q3, Q4 (Total and per phase)
  - Volts: Per phase
  - Current: Per phase
  - PF: Total, Per phase
- Voltage Angles: Vab, Vac
- Current Angles: Ia, Ib, Ic
- Frequency
- Blade Temperature
- Total Harmonic Distortion (THD): Per phase
- Total Demand Distortion (TDD): Per phase
- Micro Arc Count

KYZ

- 4 KYZ outputs and inputs
- Supported on Form 9S, 12S, 16S, 36S/46S, 35S/45S
- Optional feature

Tamper

- Inversion, Removal, Outer Cover Removal, Magnetic Tamper, Service Intrusion

Supercapacitor

- Supports a supercapacitor to maintain the clock during an outage for 24 hours
- If the Mains Disconnect Switch has been configured to open on power down, the super cap supports the ability to wake up after 60 seconds to confirm the outage and open the Mains Disconnect Switch

Real Time Clock

- Real time clock accuracy of +/- 500mS/day
- Configurable to synchronize its native clock utilizing crystal and Network Time propagated from the NIC
- When a NIC is installed, the real time clock is synchronized to the communications network every hour

Secure, Local Communications

- Bluetooth®

Micro-Arc Detection

- Tesco Circuit
- Configurable Alarm Thresholds

Temperature Monitoring

- Monitors temperature of each meter stab
- Configurable Threshold

Disconnect

- 200A Switch, 320A Switch
- Configurable Demand Limiting

Protocol

- DLMS/COSEM

WASION AMERICAS

Aventa Electric Meter

One Meter. Any Network.

Technical Specifications

Forms

- 1S CL200, 2S CL200/320, 3S CL20, 4S CL20, 9S(8S) CL20, 12S CL200/320, 16S CL200/320, 36S/46S (6S) CL20, 45S (5S) CL20

Voltage

- Reference Voltage: 120V~480V
- Operating Voltage Range: 96V-576V

Current

- Starting Current
  - Class 20 <5mA
  - Class 200 <20mA
  - Class 320 <50mA

Accuracy Class

- 0.2

Frequency

- Rated Frequency: 60Hz
- Frequency Range: ±2%

Power Consumption

- Power Consumption in Voltage Circuit (Active): ≤5 W
- Power Consumption in Voltage Circuit (Apparent): ≤20 VA
- Power Consumption in Current Circuit: ≤1VA

Ingress Protection

- IP55, UL50-Type3

Clock Accuracy

- ≤ 0.5 s/day under normal operating temperature

Lifetime

- 20 Years

Humidity

- 0 to 95% non-condensing

Temperature

- -40℃ to +85℃

Standards Compliance

- **ANSI C12.1-2024:** Code for electricity metering
- **ANSI C12.10-2024:** EM watt-hour meter
- **ANSI C12.30-2022:** Test Requirements for Metering Devices Equipped with Service Switches
- **ANSI C12.31G TR-2024:** Guide for the Measurement of Voltage, Current, Power, Energy, and Power Factor (Technical Report)
- **IEC 60068:** Environmental Testing, including general, cold, dry heat, simulated solar radiation at ground level, vibration, change in temperature, shock, salt mist, and bounce
- **IEC 62053:** Static meters for active energy, reactive energy
- **IEC 62056:** Electricity metering data exchange – The DLMS/COSEM suite
- **IEC 62059:** Dependability – General concepts, collection of meter dependability data from the field; accelerated reliability testing, elevated temperature and humidity
- **IEC 61000:** Electromagnetic Compatibility (EMC): Compatibility levels in industrial plants for low frequency conducted disturbances
- **UL 2735C:** Standard for Safety – Electric Utility Meters
- **UL 2735:** Standard for Safety – Electric Utility Meters
- **MC LMB-EG-07:** Specifications for Approval of Type of Electricity Meters, Instrument Transformers and Auxiliary Devices
- **MC S-E-06:** Specification for the Approval of Type of Electricity Meters and Auxiliary Devices - Amendments to Measurement Canada Specification LMB-EG-07
- **MC PS-E-18:** Fundamental Metering Specification (Note: This standard is under review by MC)
- **RoHS 2:** Restriction of Hazardous Substances
- **ISO/IEC 16388:** Code 39 bar code symbology specification

Physical Dimensions

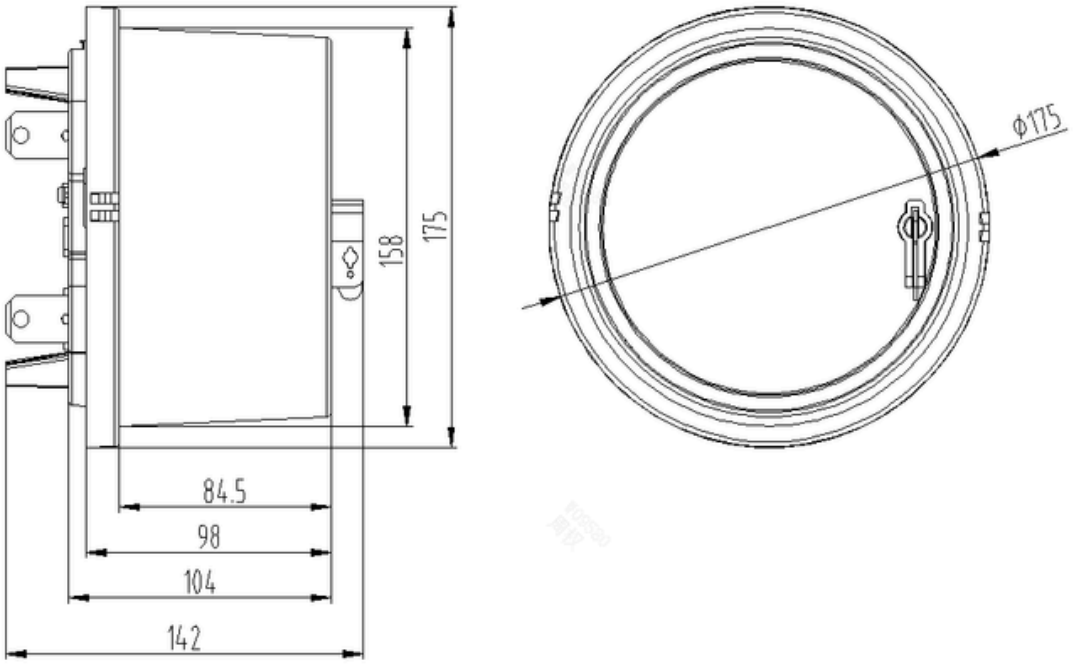

Form 1S, 2S CL200, 12S CL200:

	A	B	C	D	E	F	G
in	3.33in	3.96in	4.09in	5.59in	6.22in	6.89in	6.89in
mm	84.5mm	98mm	104mm	142mm	158mm	175mm	175mm

Form 2S CL320, 3S, 4S, 9S, 12S w/KYZ, 12S CL320, 16S, 36S/46S, 45S:

	A	B	C	D	E	F	G
in	4.17in	4.69in	4.96in	6.5in	6.22in	6.89in	6.89in
mm	106mm	119mm	126mm	165mm	158mm	175mm	175mm